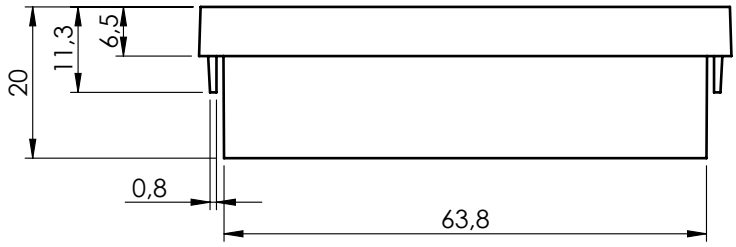

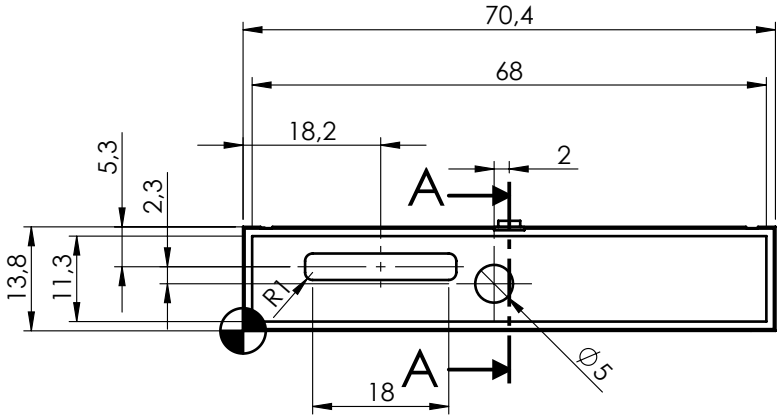

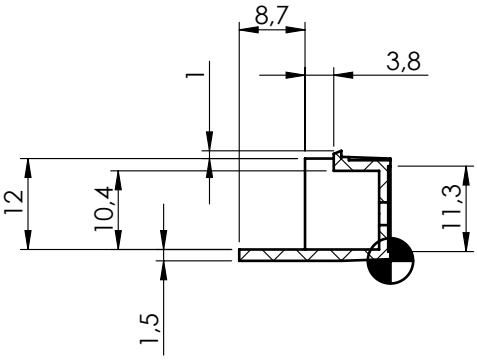

SECTION A-A

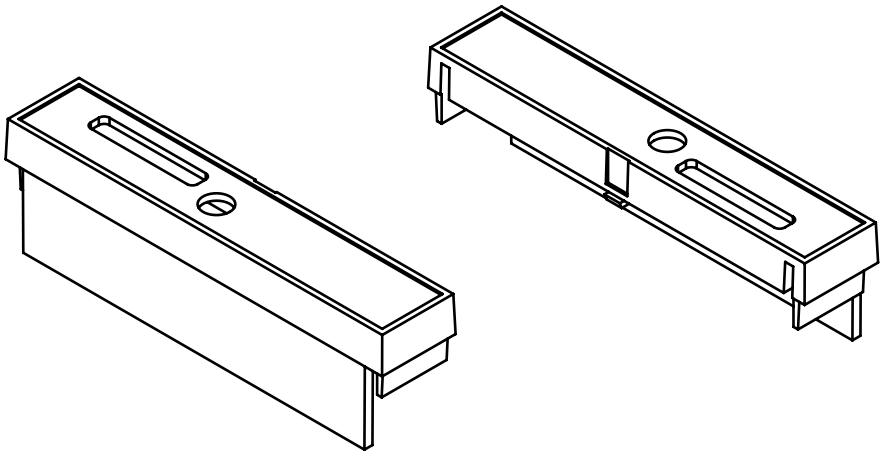

General information:
- Workpiece zero point for mechanical processing
- Minimum recommended radius for machining = R1.0 mm

General Tolerance UNI EN 22768/1 Media (m)					Sheet:
from 0.5 to 3	from 3 to 6	from 6 to 30	from 30 to 120	from 120 to 400	1
± 0.1	± 0.1	± 0.2	± 0.3	± 0.5	
Scale: 1:1	Drawed: M.S.	Checked: R.N.	Date: 15/06/2023	Material: PC/ABS	Process: INJECTION
Dimension in mm	The present drawing cannot be reproduced or comunicated to 3d parties, even partially, without the authorization of ITALTRONIC Srl. Italtronic reserves to protect its own rights according to the law.	Derived from: --		Weight: 4.55 gr	Cod. Mold: ST.05CV000
italtronic enclosures for electronics italtronic.com		Description: COPRIMORSETTO SPECIALE 4M-CM070 TERMINAL COVER MODULBOX 4M-CM070			
		Drawing nr.: **2_250_03794**		Rev.: 00	A4